CG202

USER MANUAL

Package Content			
	Image	Q'ty	Used for
A		12	Screws-MB+2.5" SSD
B		6	PSU Screw
C		4	3.5" HDD Screws
D		2	Spare Standoff
E		4	Cable Tie

Connectors

	Combo Audio		POWER SW
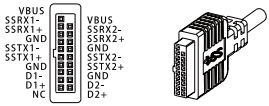	USB3.0	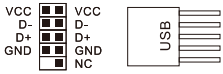	USB2.0

I/O Panel

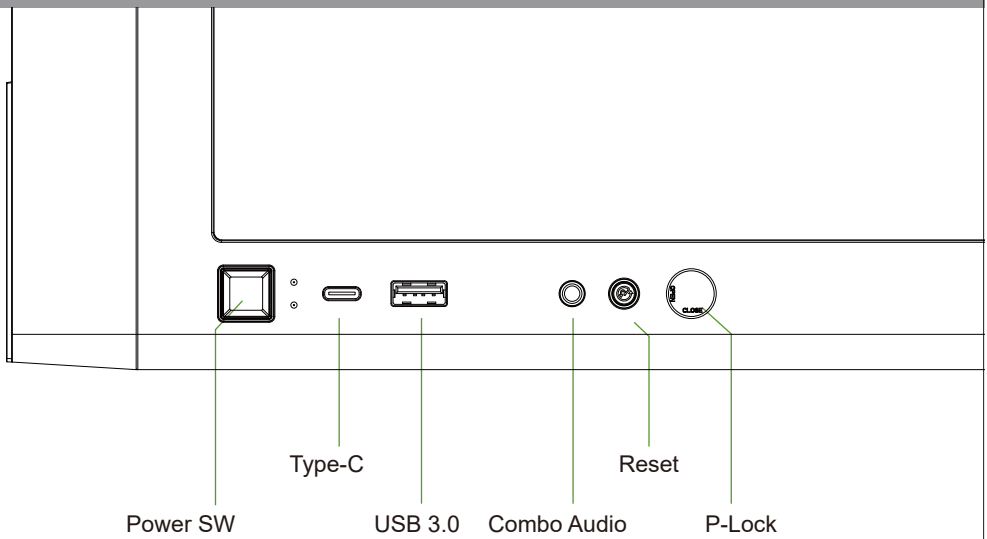

Exploded View

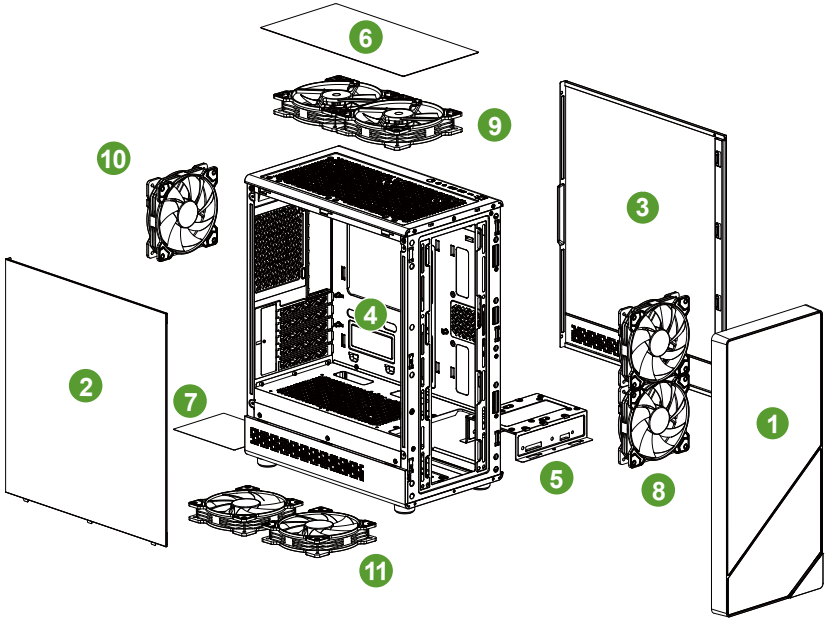

1	Front Panel	6	Magnetic dust filter on top
2	Tempered glass left side panel	7	Dust filter at the bottom
3	Right side panel	8	Front Fan x2(optional)
4	Chassis	9	Top Fan x2(optional)
5	HDD bracket	10	Rear fan x1(optional)
11	PSU cover fan x2(optional)		

Installation Guide

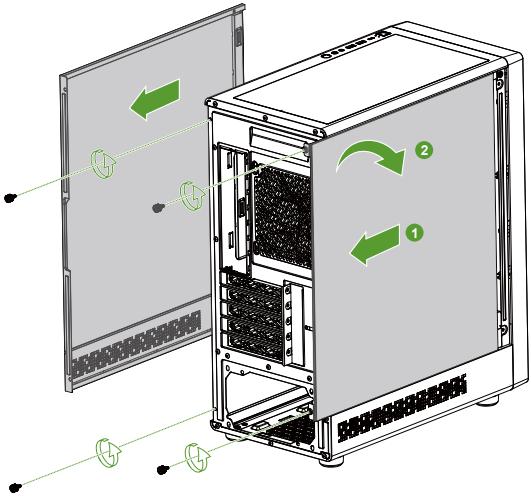

Remove the left and right side panel and bottom plate

Installation Guide

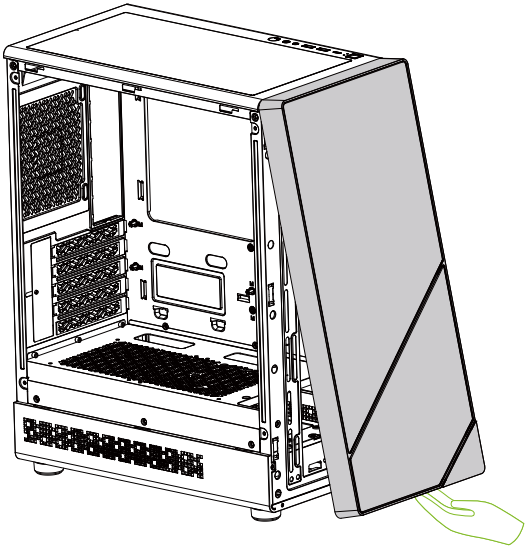

Remove the front panel

*If the fan has been pre-installed in front, no need to remove the panel

Installation Guide

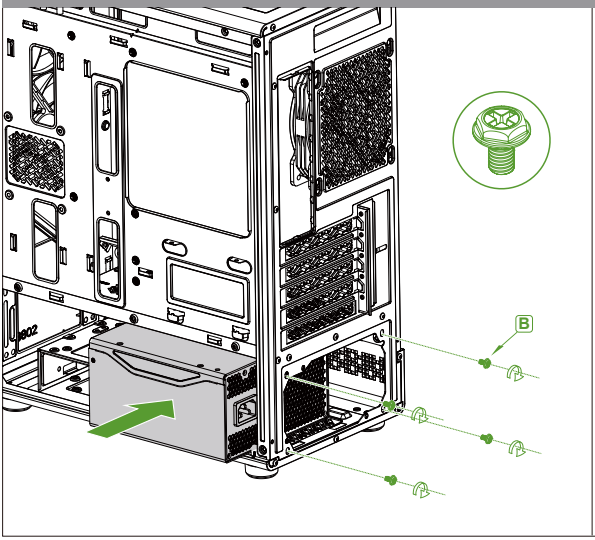

Insert PSU from right side, secure with screws.

Installation Guide

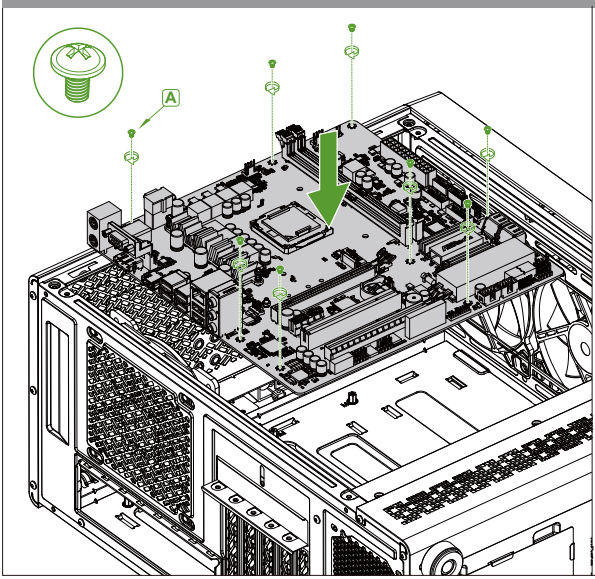

Install the motherboard.

Installation Guide

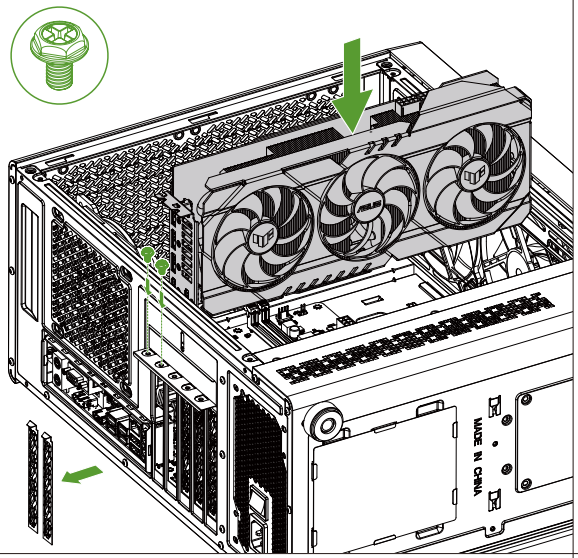

Remove the PCI-E interface card, put it in the graphics card, lock the screw fixation.

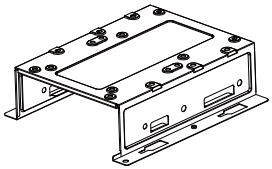

Option 1

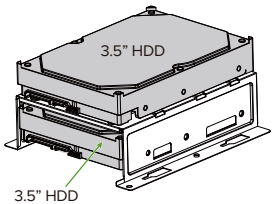

Option 2

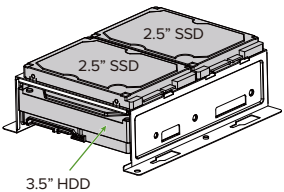

Option 3

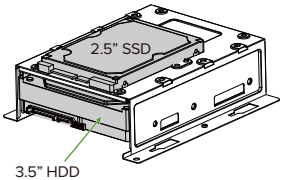

Install 2.5” SSD and 3.5” HDD

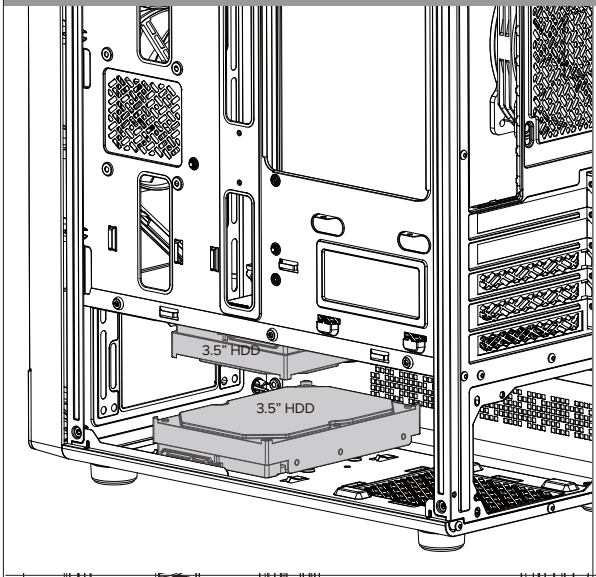

Install 3.5" HDD

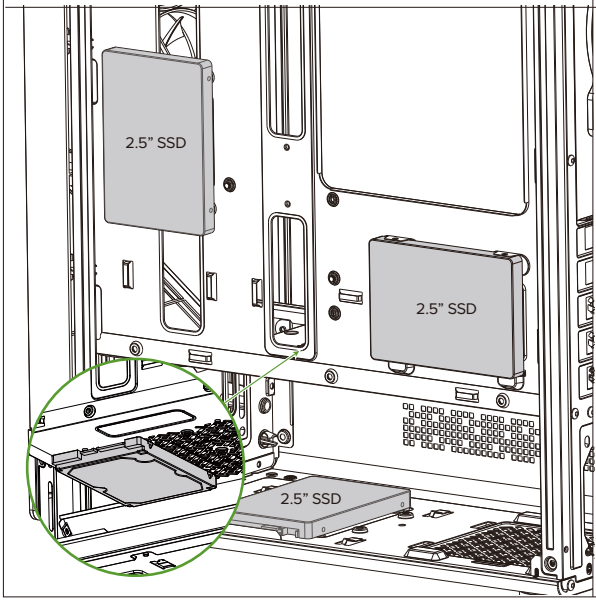

Install 2.5" SSD

Cooling System

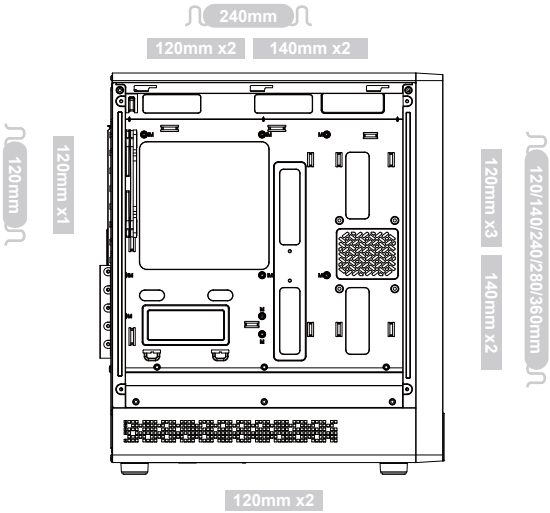

Fan Cooling System:

Front: 120mm x2(optional)
Top: 120/140mm x2(optional)
Rear: 120mm x1(optional)
PSU Cover: 120mm x2(optional)

Liquid Cooling System:

Front: 120/140/240/280/360mm
Top: 240mm((RAM Height≤30mm))
Rear: 120mm

Airflow Direction

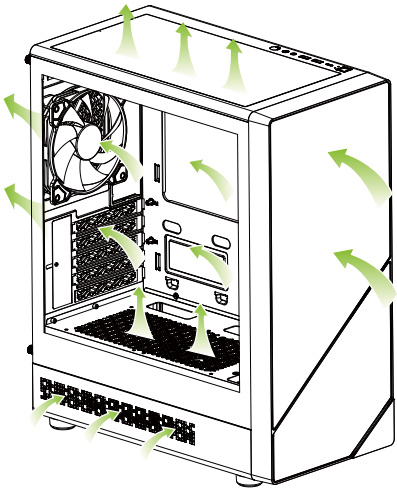

Pay attention to the airflow direction inside the chassis.