AOC GAMING

CG303

MATX GAMING CASE
USER MANUAL

Package Content			
	Image	Q'ty	Used for
A		14	MB Screw
B		4	PSU Screw
C		8	3.5” HDD Screws
D		8	2.5” SSD Screws
E		14	Hard Drive Damper
F		1	Hex Wrench
G		5	Motherboard Standoff
H		6	Cable Tie

Connectors - Anschl

	Combo Audio		POWER SW
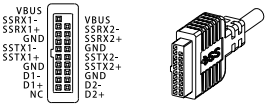	USB3.0		
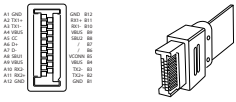	Type C Gen2		

I/O Panel

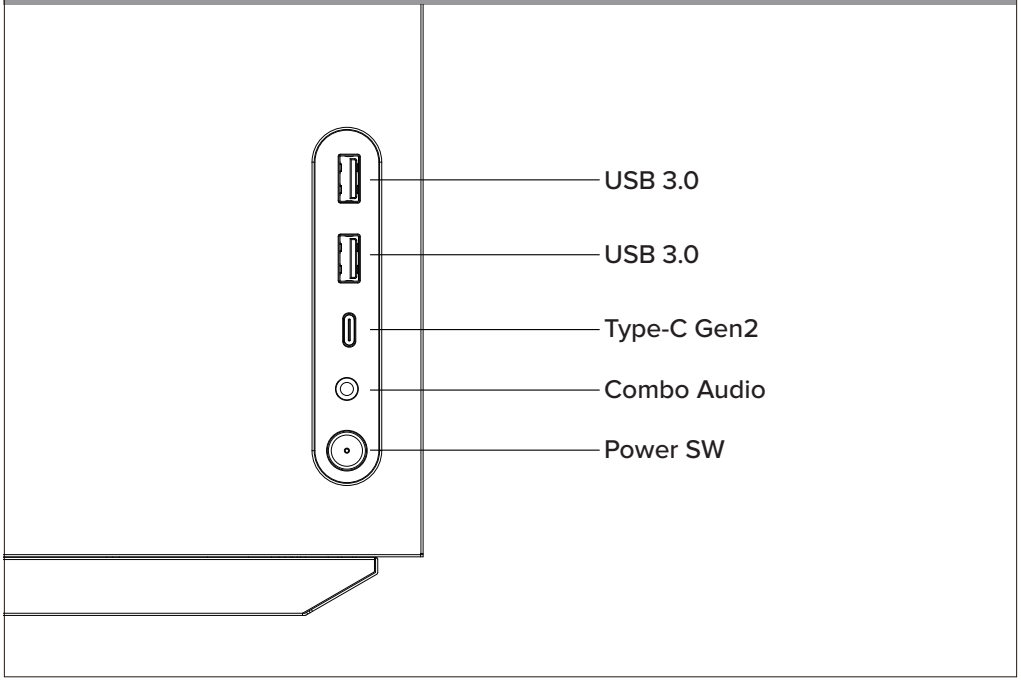

Exploded View

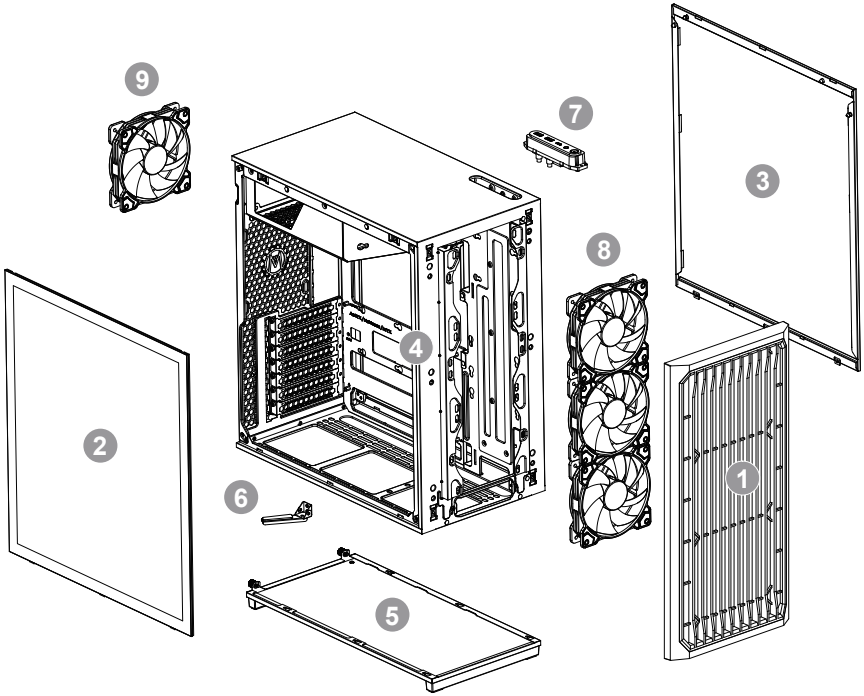

1	Front Panel	6	GPU Card Holder
2	Left side panel	7	IO Component
3	Right side panel	8	Front 120mm fan x3(optional)
4	Chassis		
5	Detachable bottom plate	9	Rear 120mm fan x1(optional)

Installation Guide

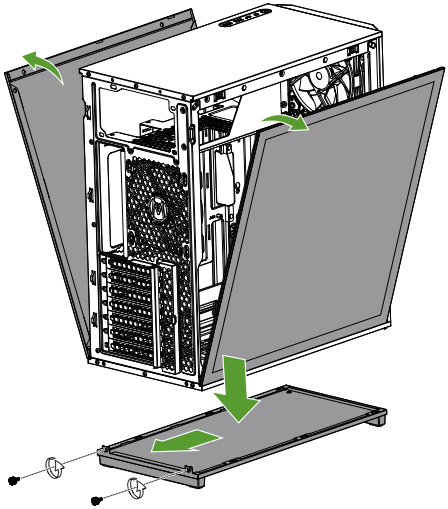

Remove the left and right side panel and bottom plate.

Installation Guide

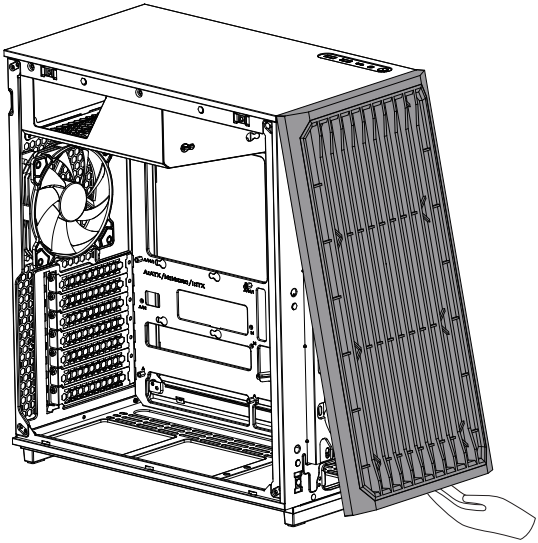

Remove the front panel

*If the fan has been pre-installed in front, no need to remove the panel.

Installation Guide

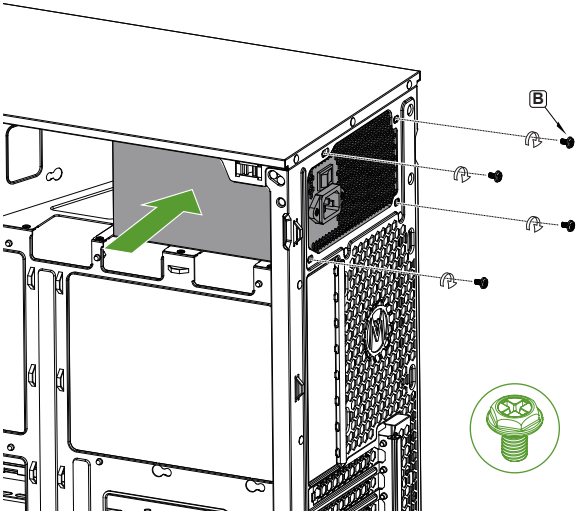

Insert PSU from right side, secure with screws.

Installation Guide

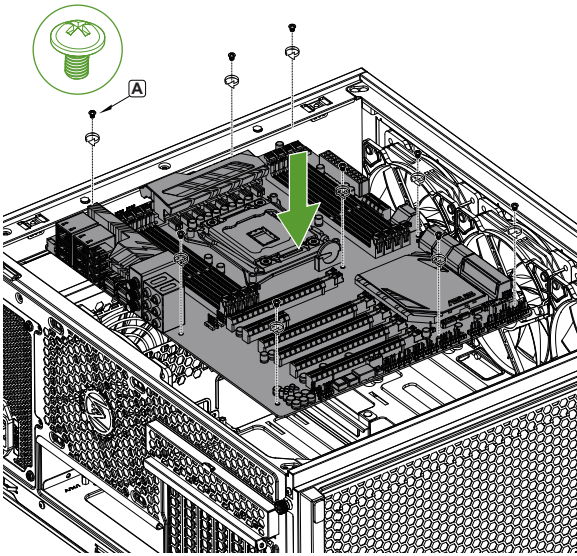

Put in the motherboard, place the I/O baffle, and lock the screws.

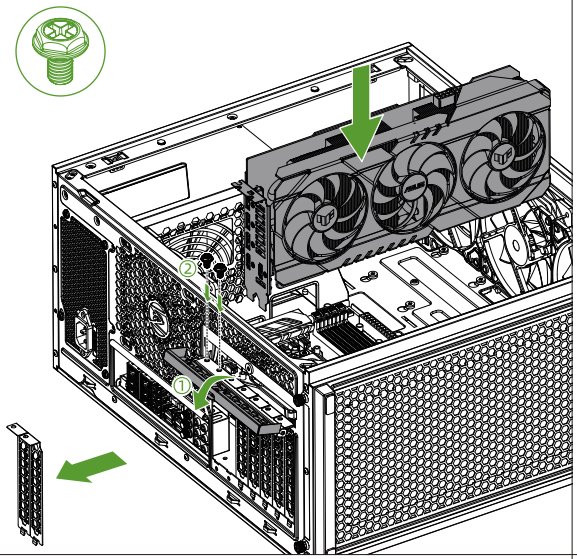

1.Open the magnetic PCI-E baffle.
2.Remove the PCI-E interface card, put it in the graphics card, lock the screw fixation.

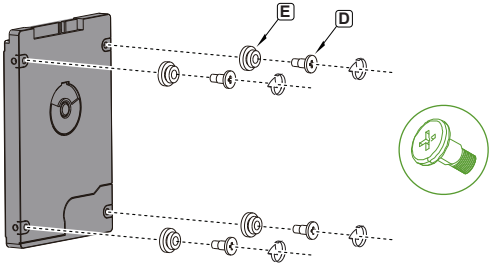

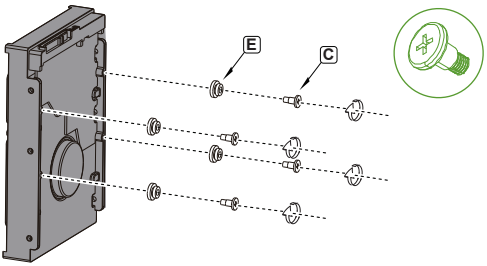

Install SSD and HDD lock -free screws.

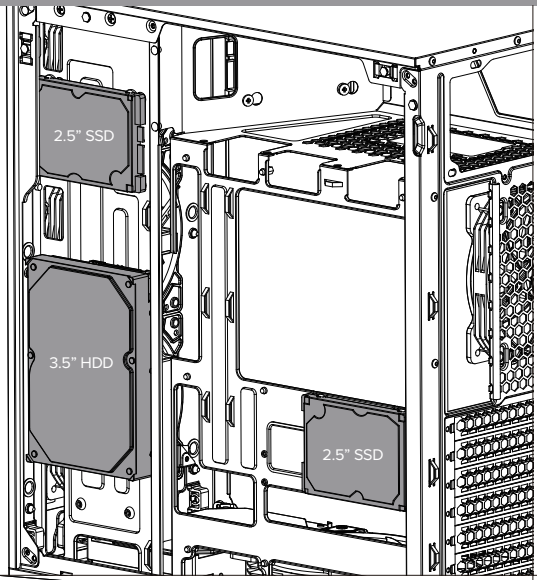

Install 3.5" HDD and 2.5" SSD

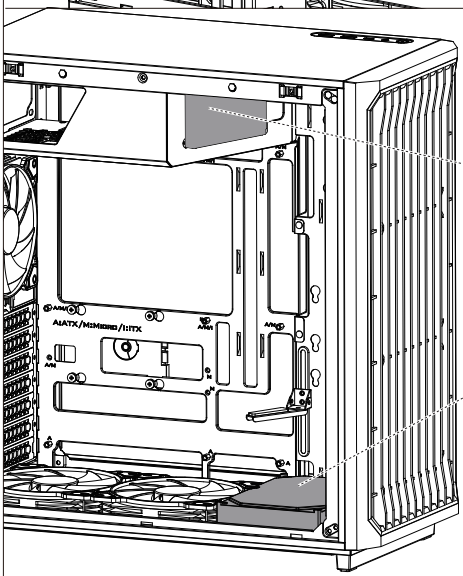

Install 3.5" HDD and 2.5" SSD

* If a 3.5-inch hard drive is installed at the bottom, only 2*120mm fans or 1*140mm fan can be installed.

Cooling System

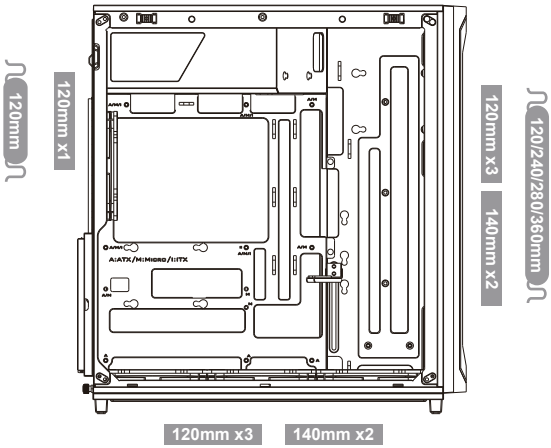
120mm
120mm x1
120mm x3
140mm x2
120/240/280/360mm
120mm x3
140mm x2
A/M
A/M/H
A/M/H
A/M
A/M
A/M

PWM ARGB HUB DEMO LINK GUIDE

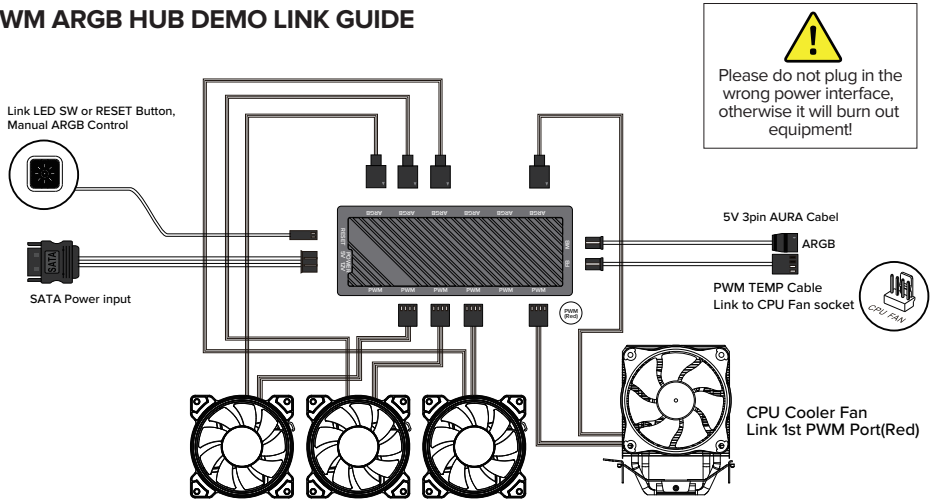

REMOTE CONTROL BUTTON FUNCTION

